睡眠体征传感器是 Beegor 贝骨公司专门为睡眠-体征监测用途开发的传感器，其核心采用 PIEZOR 压电薄膜。

H80046、H60046 压电薄膜传感器用于医疗、养老领域的监测人体动态心跳、呼吸、睡眠、打鼾等用途。

H70030 压电薄膜传感器用于智能卧室、智能床垫领域的监测人体睡眠、动作、心率、呼吸等用途。

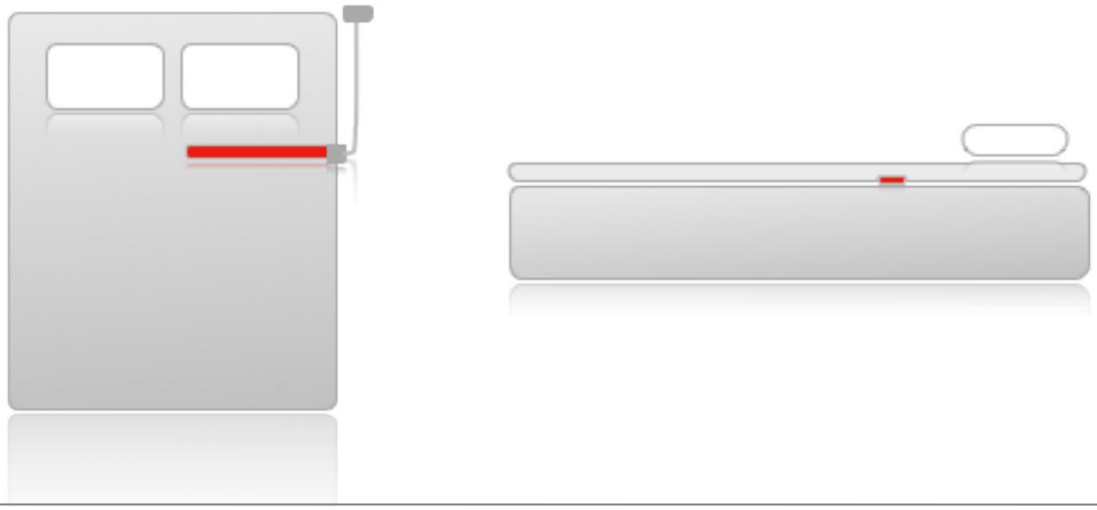

产品优势

零辐射——完全对人体无辐射

无源——无电源，消除火灾隐患

超薄——无异物感，使用更舒适

超强穿透力——振动感应的穿透力更强

抗干扰强——得益于全屏蔽设计

防水、耐用——得益于防水、强韧的封装

技术原理

Beegor 睡眠体征传感器核心是 PIEZOR 压电薄膜，其机理——利用有机材料“贝壳”孔洞型结构特点，形成空间电荷以呈现出压电效应。当压电薄膜受到正向压力的时，其厚度发生微小地变化，将诱导出相应表面电极层上的感应电荷的变化，从而在外电路中表现出短路电流或开路电压。

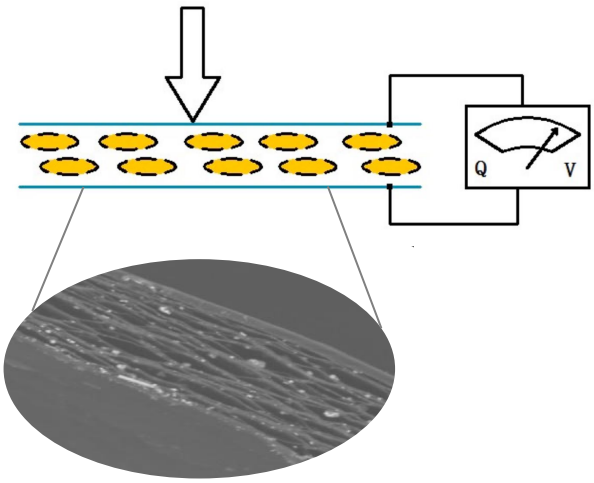

技术参数

	单位 (Units)	数值 (Value)	误差(Error)
灵敏度d_{33} (Piezoelectric Charge Constant)	pC/N	**40-80**	±5%
压力频率范围F (Force Frequency Range)	Hz	0.1 to 20k	
电容 C(Capacitance, at 1 kHz)	nF	11.5	±5%
电极引出线 (Electrode Outlet)	2.54mm端子		定制
工作温度(Operating Temperature)	℃	-20 to 60	
湿度 (Humidity)		0 to 100%	
压强范围P (Pressure Range)	kPa	0.1 to 1000	
传感器规格			
长度L(Length)	mm	**600/700/800**	±0.5%
宽度W(Width)	mm	**30/46**	±0.5%
厚度D (Thickness)	mm	0.42	±1%
应用电路			

要得到有效的体征信号，需要对*Beegor*智能床垫传感器进行电路处理：需要依次接入电荷放大器、低通滤波器、电压放大器和MCU处理器，如下图所示。

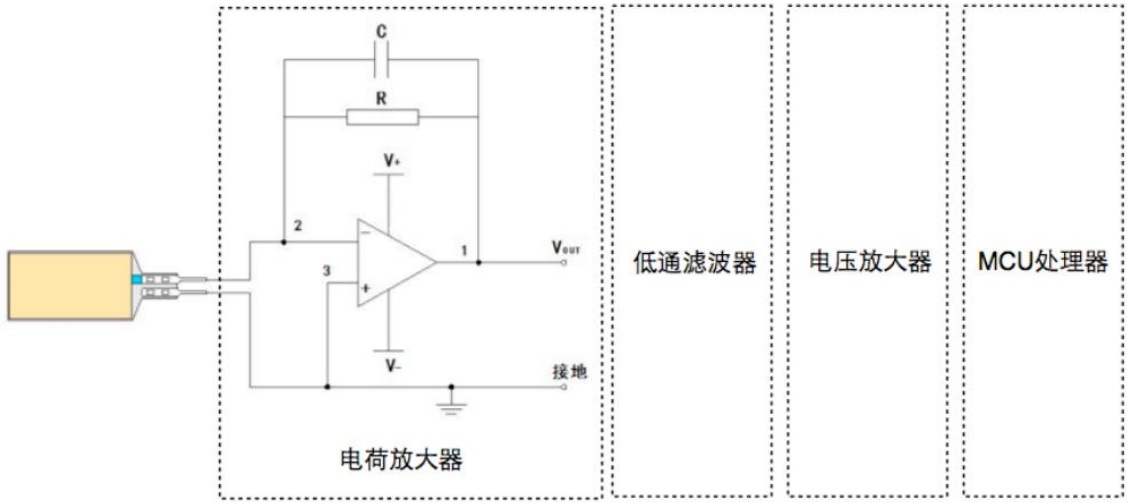

电荷放大器：建议电阻R＝200MΩ， 电容C＝1nF。

低通滤波器：根据后续体征识别的算法的不同，低通截止频率通常采用5Hz－20Hz范围。

电压放大器：根据传感器在床垫上的不同位置，通常放大30－300倍范围，建议采用自动增益放大。

MCU处理器：根据后续体征识别的算法的不同， 采样频率通常采用20Hz－200Hz范围。

Beegor

BIGGER THAN SENSE

Sleep Sign Sensor

Product Manual

Beegor Sleep sign sensor is a sensor specially developed by Beegor Company for sleep-sign monitoring, what are used for monitoring human dynamic heartbeat, breathing, sleep and snoring in medical and pension fields. The core of the sensor is PIEZOR piezo film.

H80046 and H60046 sensors are used in medical and pension fields.

H70030 sensor is used in the field of intelligent bedroom and mattress.

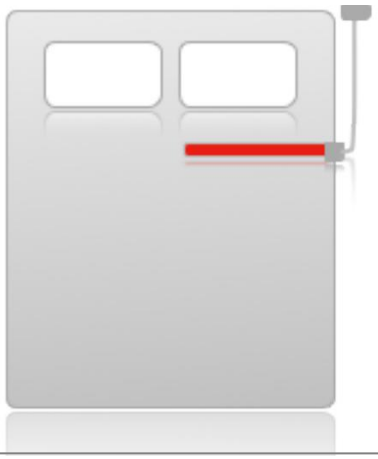

Advantage

No radiation - completely non-radiation to human body

No power -eliminating fire hazards

Ultra-thin - no foreign body feeling, more comfortable to use

Super Penetration Force-Vibration Induced Penetration Force is Stronger

Strong Anti-Benefit from Full Shielding Design

Waterproof and Durable-Benefiting from Waterproof and Tough Packaging

Technical Principle

The core mechanism of Beegor Sleep Sign Senso is the formation of space charges to exhibit piezoelectric effect by utilizing the structural characteristics of organic shell holes. When the piezoelectric film is subjected to forward pressure, its thickness changes sligh which will induce the change of induced char on the corresponding surface electrode layer, thus showing short-circuit current or open-circuit voltage in the external circuit.

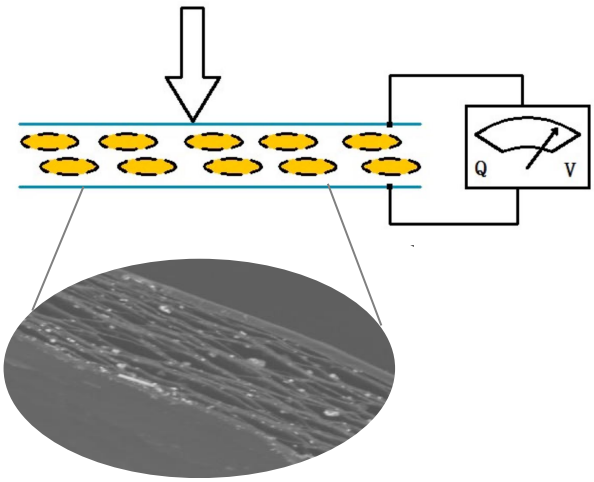

Log in at : www.beegor.com

Tel:(+86) 0512-62988283 / (+86)15216704413 (Manager Lee)

Address: 4#3rd , 45 Songbei Road, Suzhou Industrial Park,China

Technical Parameter

	单位 (Units)	数值 (Value)	误差(Error)
灵敏度d_{33} (Piezoelectric Charge Constant)	pC/N	**40-80**	±5%
压力频率范围F (Force Frequency Range)	Hz	0.1 to 20k	
电容 C(Capacitance, at 1 kHz)	nF	11.5	±5%
电极引出线 (Electrode Outlet)	2.54mm	Terminal or FPC	Customized
工作温度(Operating Temperature)	℃	-20 to 60	
湿度 (Humidity)		0 to 100%	
压强范围P (Pressure Range)	kPa	0.1 to 1000	
传感器规格 (Sensor Specifications)			
长度L(Length)	mm	**600/700/800**	±0.5%
宽度W(Width)	mm	**30/46**	±0.5%
厚度D (Thickness)	mm	0.42	±1%
Application Circuit			

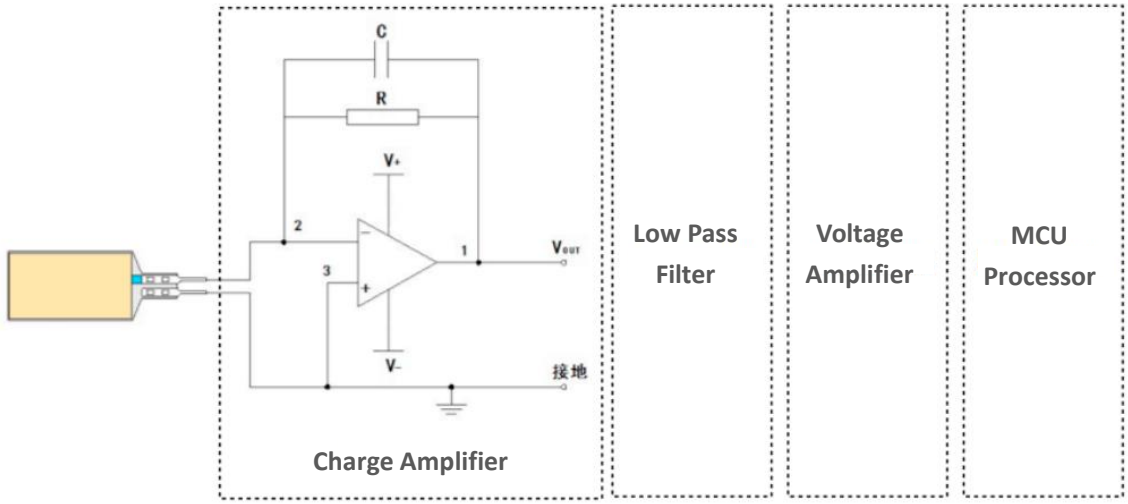

- Charge Amplifier: Resistance 200M, Capacitance 1nF
- Low-pass filter: algorithm-related, 5-20Hz
- Voltage amplifier: related to the thickness of mattress, 30-300 gain or gain automatically
- MCU Processor: AD Sampling Frequency 20Hz-200Hz